Elstead LIGHTING

KL/PIPER2 – KL 43727ESP

Indoor Only
220V-240V, 50Hz-60Hz
Class I

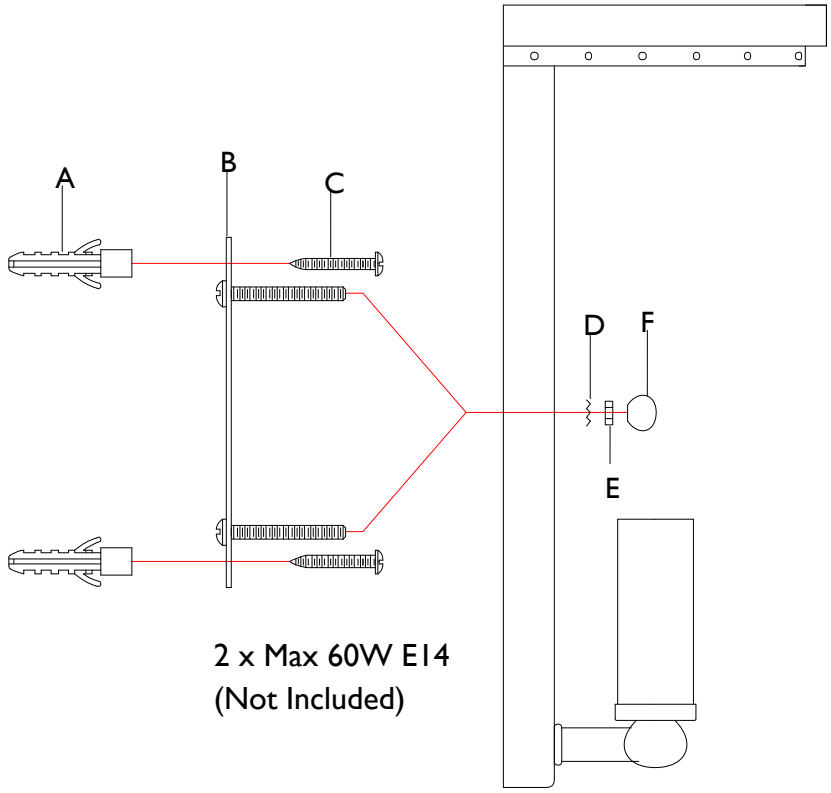

2 x Max 60W E14
(Not Included)

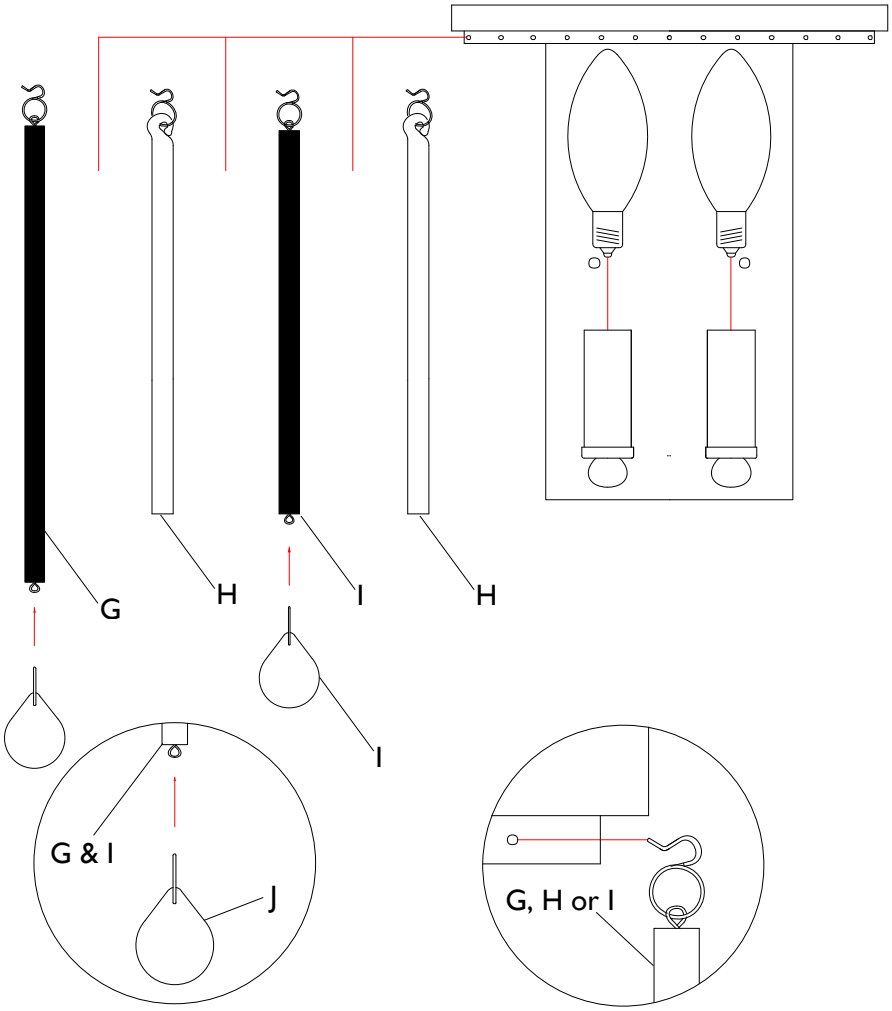

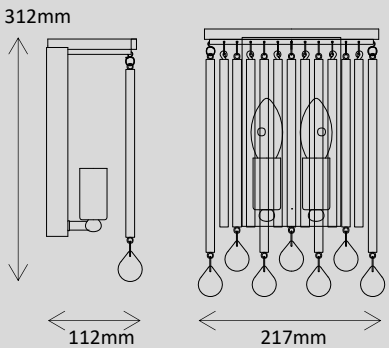

A		x 2
B		x 1
C		x 2
D		x 2
E		x 2
F		x 2
G	225mm	x 4
H	195mm	x 8
I	195mm	x 5
J		x 9
K		x 1

Help line (01420) 82377

IT IS RECOMMENDED THAT LIGHTS ARE INSTALLED BY A QUALIFIED ELECTRICIAN

DR-0268